Studio Jaros

Candle holder

Juliette Enthoven

2020-2021

CZECH
TECHNICAL
UNIVERSITY
IN PRAGUE

DESIGN BRIEF p.1

IDEATION p.2-3

CLAY MODEL p.4

FIRST MODEL p.5

SECOND MODEL p.6

FINAL MODEL p.7-10

DESIGN BRIEF

For this semester's studio I picked Atelier Jaros. We got the assignment to design tableware in any style and material we like. Scrolling through different options I decided to make a candle holder.

IDEATION

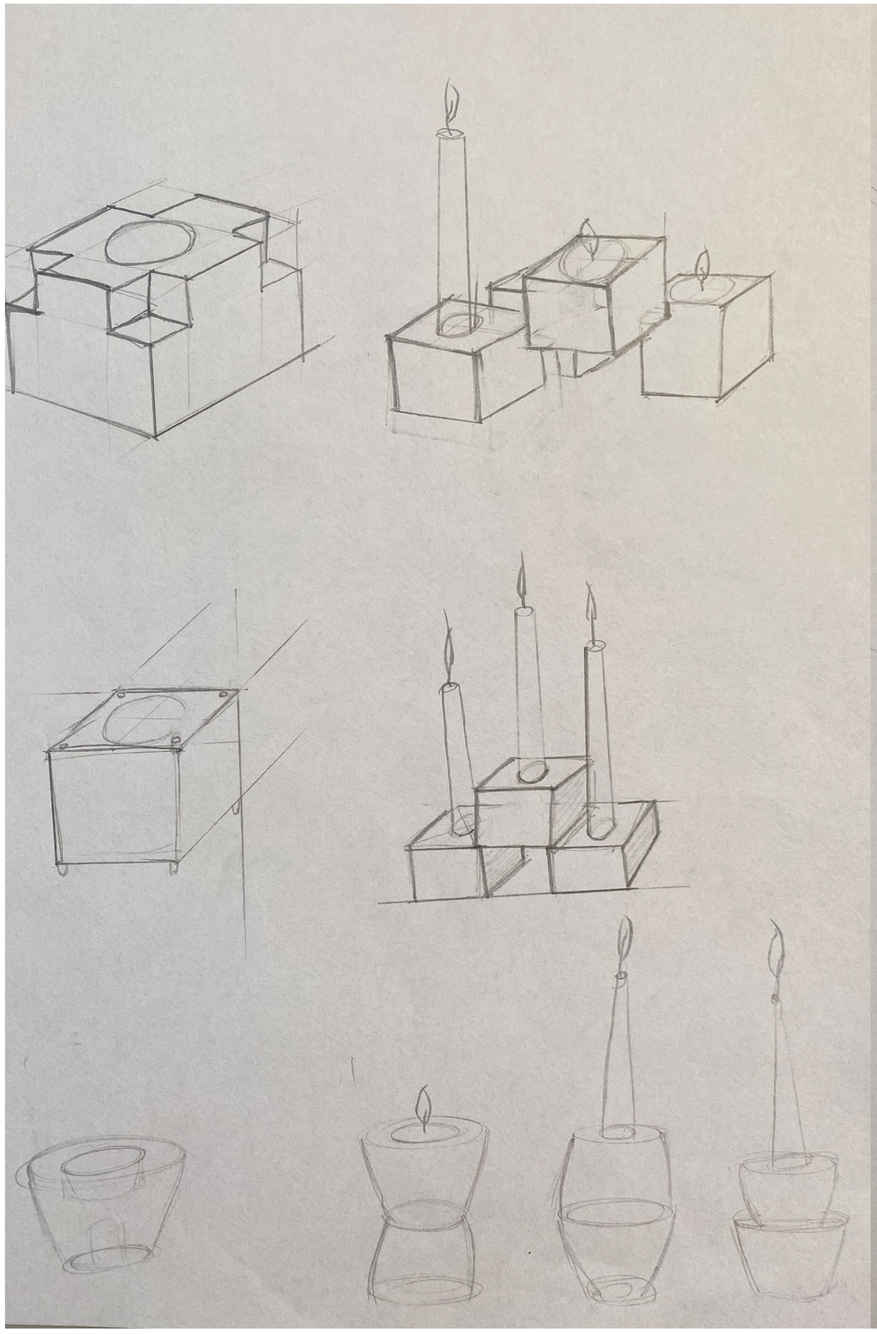

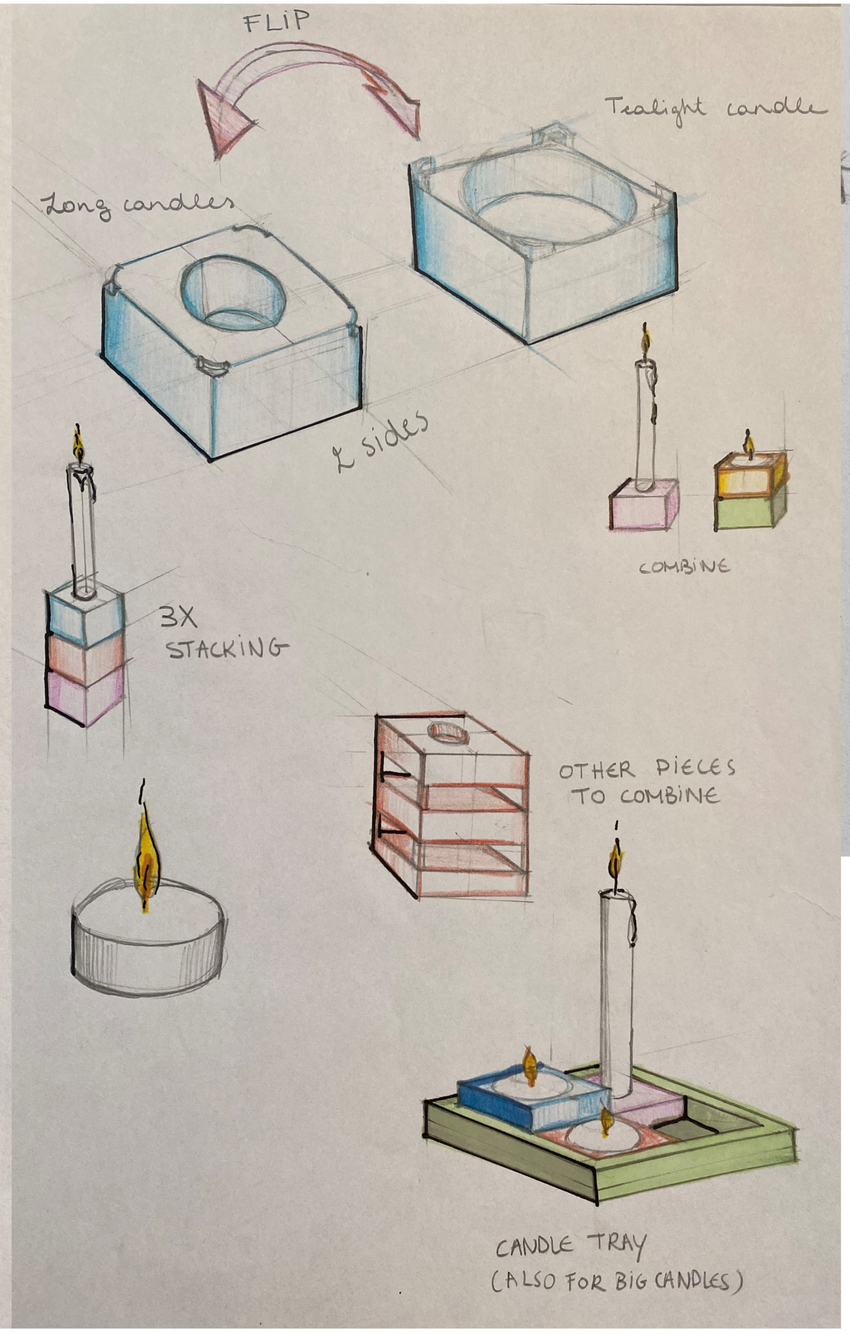

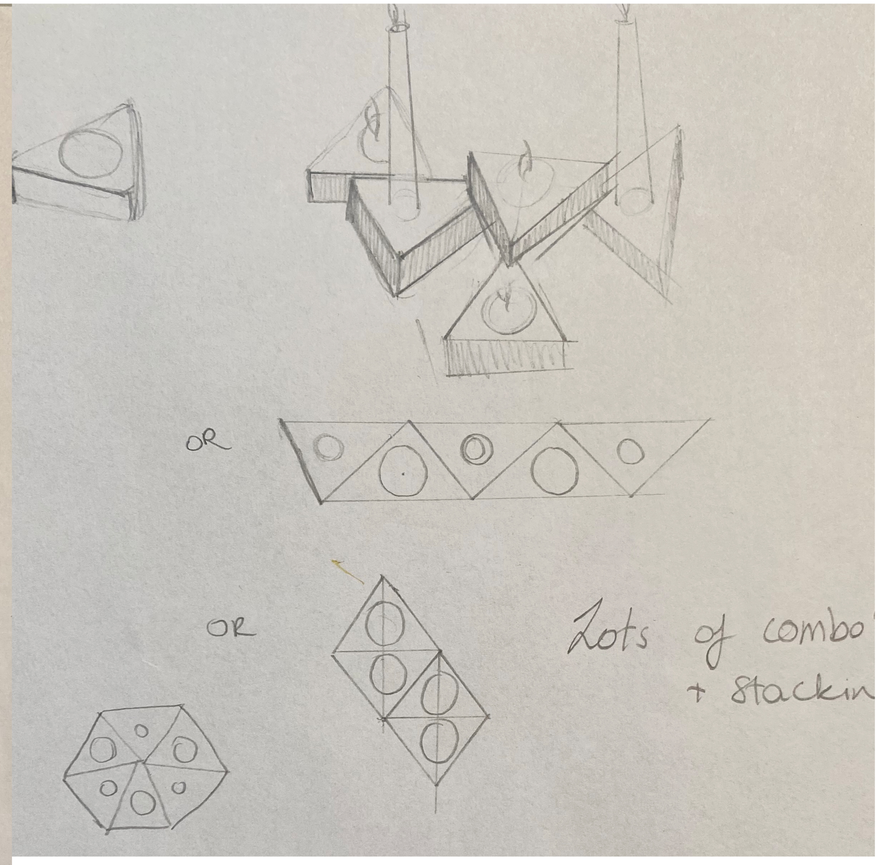

Principle idea for all of designs is that you can stack multiple holders. Next, the holders can contain small table candles and also the long candles. This is possible by flipping the pieces and finding two different hole sizes.

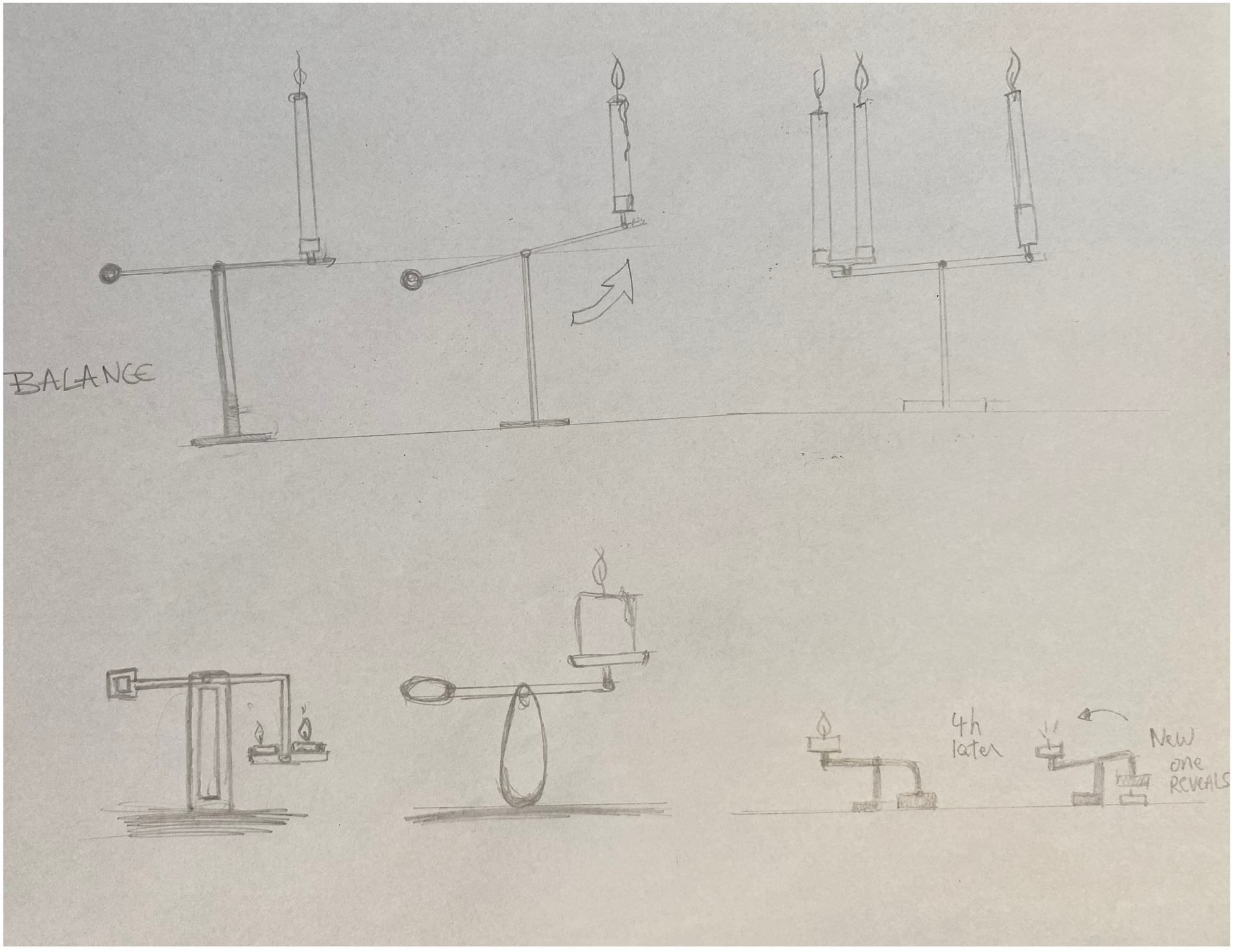

The main principles for these different sketches is 'Balance'. When one candle burns out, another one shows. Or the state of balance shows you either your candle is almost burning out.

CLAY MODEL

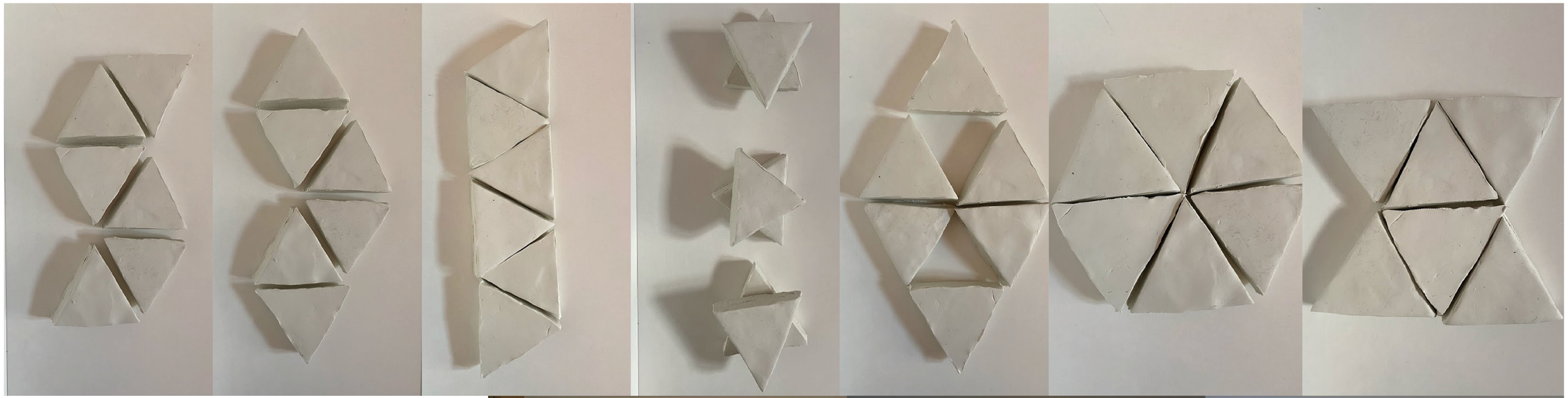

By using one shape, a triangle, you can form a lot of different shapes and stack them. One side is for tea candles and the other one is for the long candles. This extra aspect makes that you can really play with the triangles and form whatever you like.

After discussing this with the teachers we came to the conlusion that you need a lot of them to make it really work. So I can keep the stacking idea but it has to work as a single piece too.

FIRST MODEL

During my ideation I came up with a shape that consist out of two objects. The can work on their own and together. There a 6 different ways to combine them. I made two alternatives, one simple and one with a chamfer, which gives more changement in the shape. The shape a hole on both sides for the different candles.

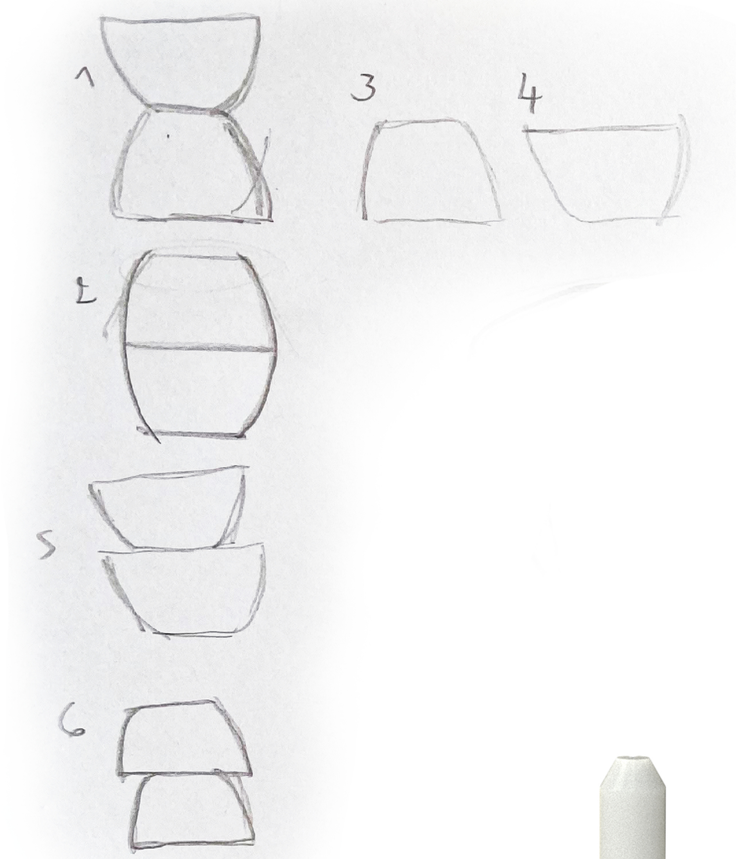

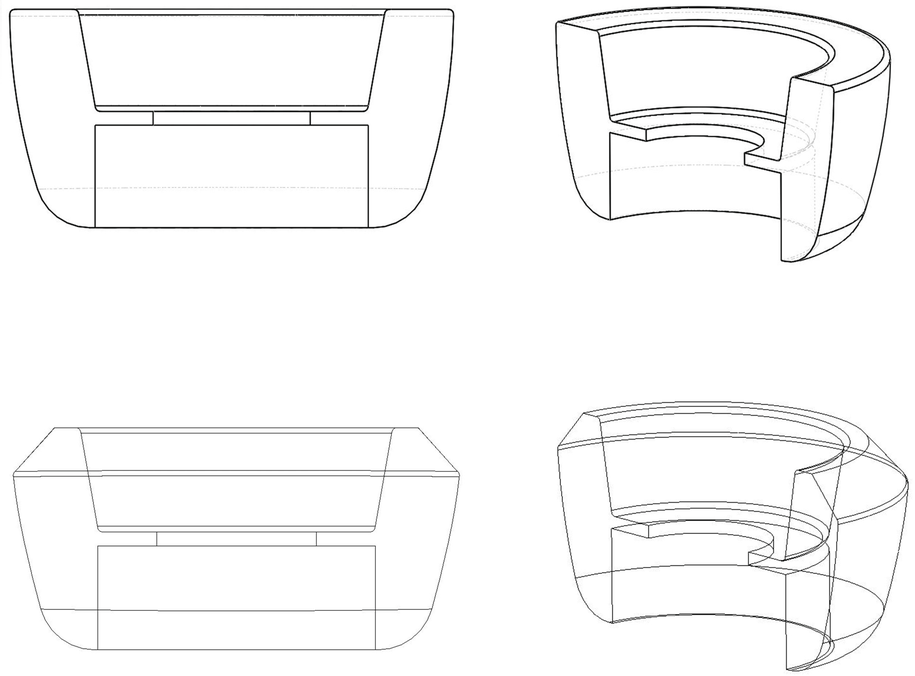

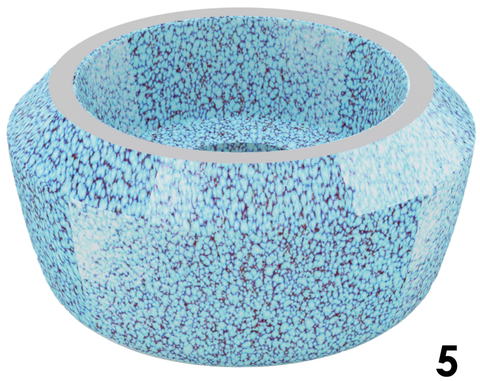

SECOND MODEL

After the consultation of the first model I decided I could work with two different shapes and become the same purpose. On top I'd have two more options since the two different shapes can each be flipped when standing on their own.

After the consultation on this shape, I was told to add a little rim for stability. This way they wont fall when you stack them. While adding these afterwards I noticed that some cobinations stayed unstable and wouldn't be possible (an example is showed on the picture in the left cbottom corner).
I would have to change the shape again for it to hold and be logical.

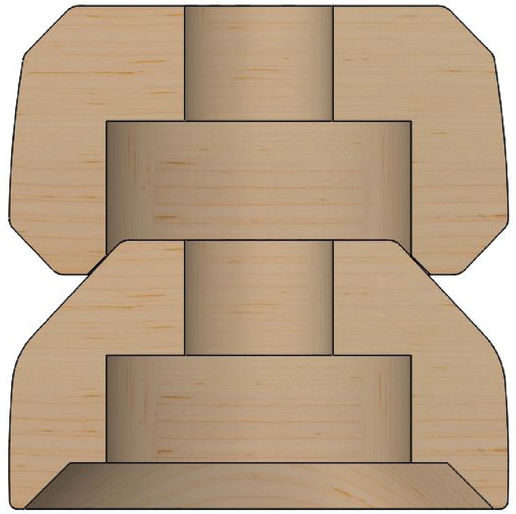

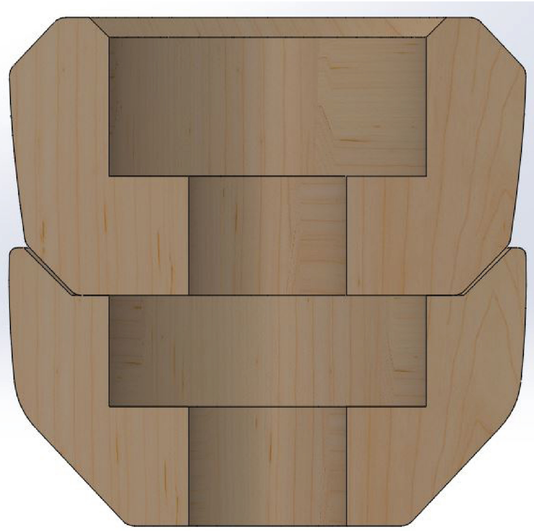

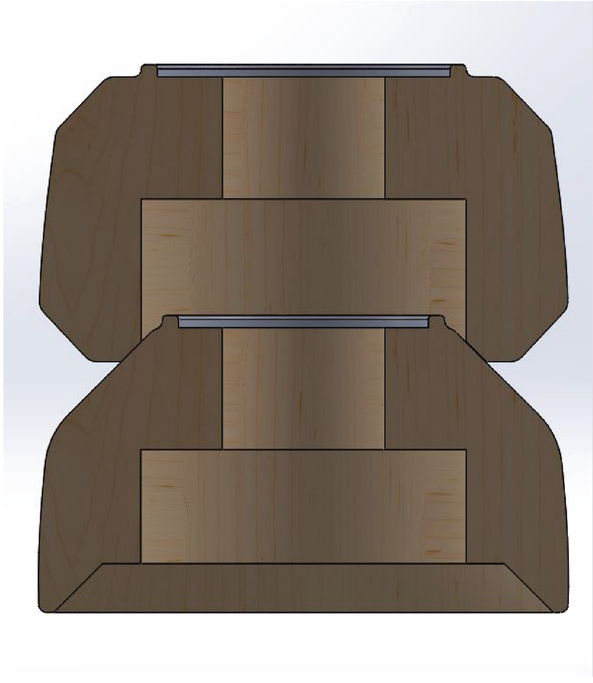

FINAL MODEL

The final model still consists of two different objects. On symmetrical one, which is shaped in a way that he can perfectly fit into the assymetrical one. The assymetrical one got a little rim on the bottom, this way it can stack in all kind of ways and this while being stable.
The both candle holders have holes to hold small and long candles on both sides. This way combinations are endless with the different kind of candles and the multiple ways you can stack them. They can be used seperately and together or when you have more than two you can combine them as you like.

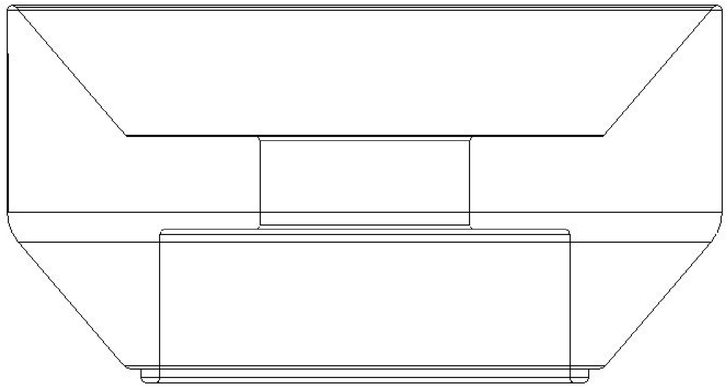

Assymetrical part

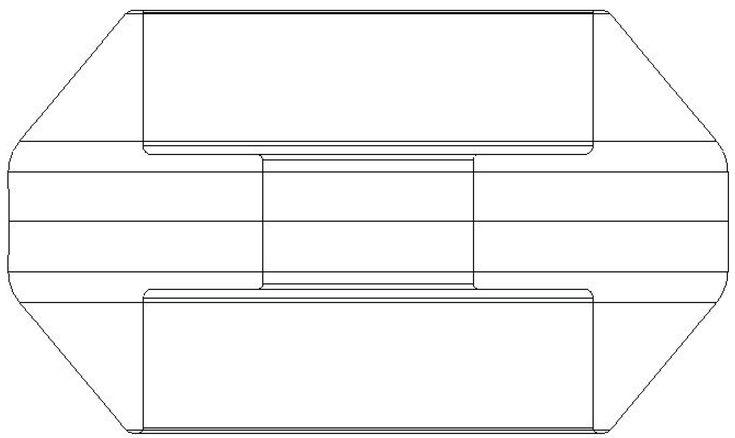

Symmetrical part

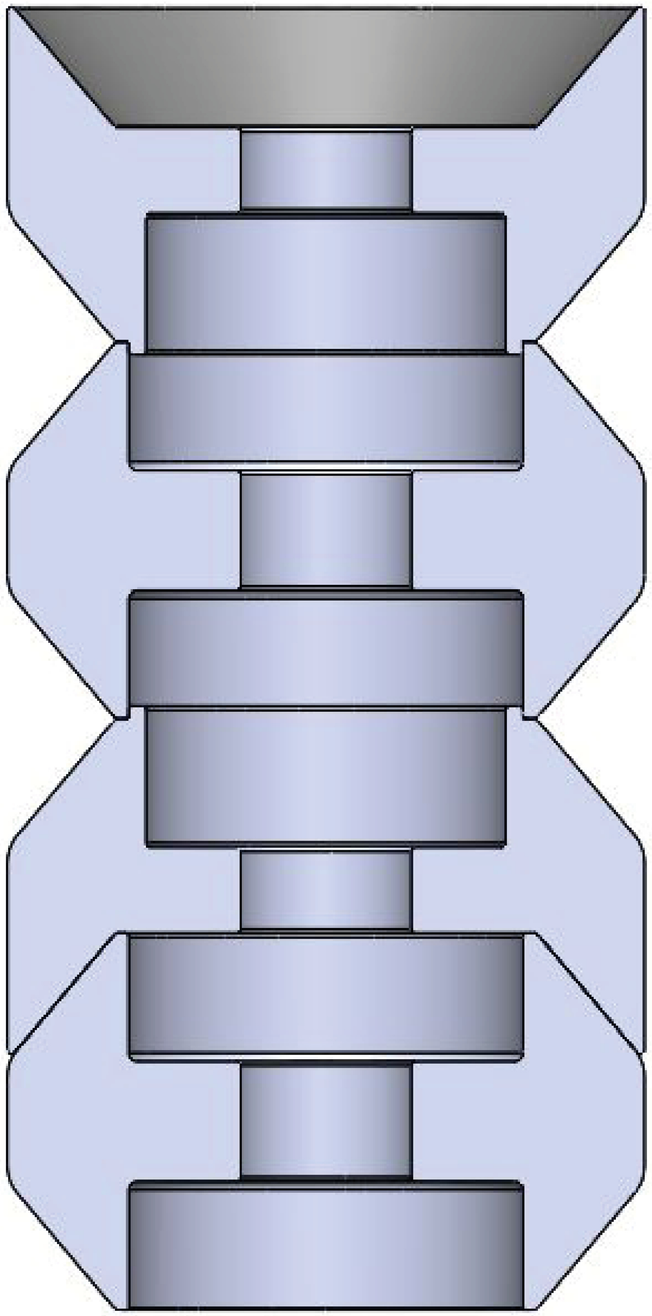

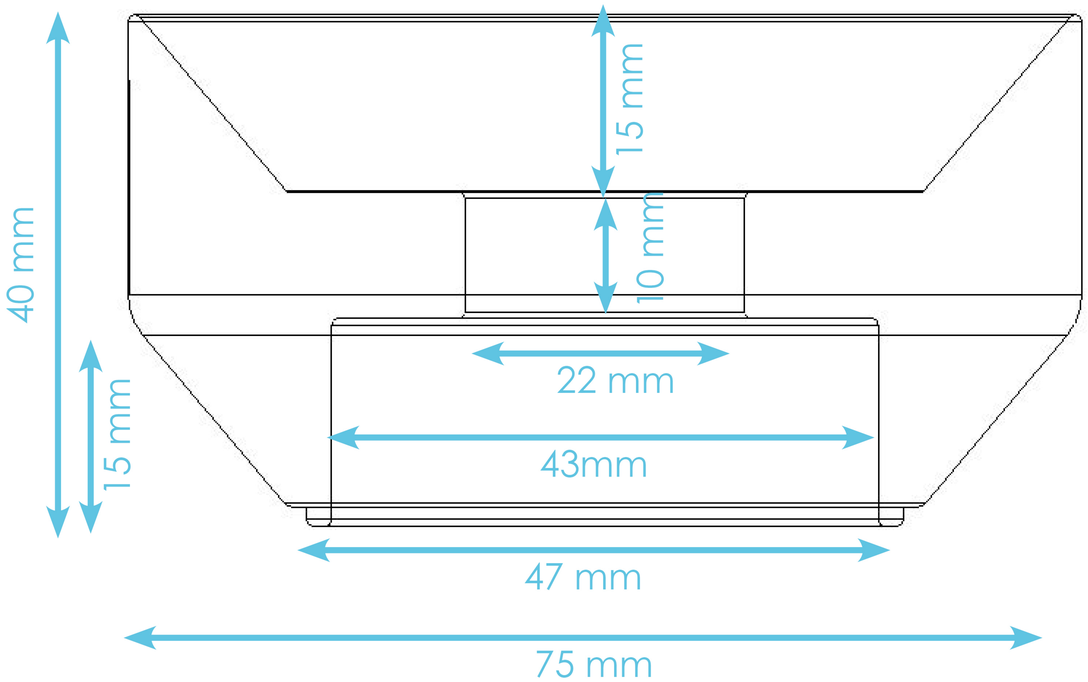

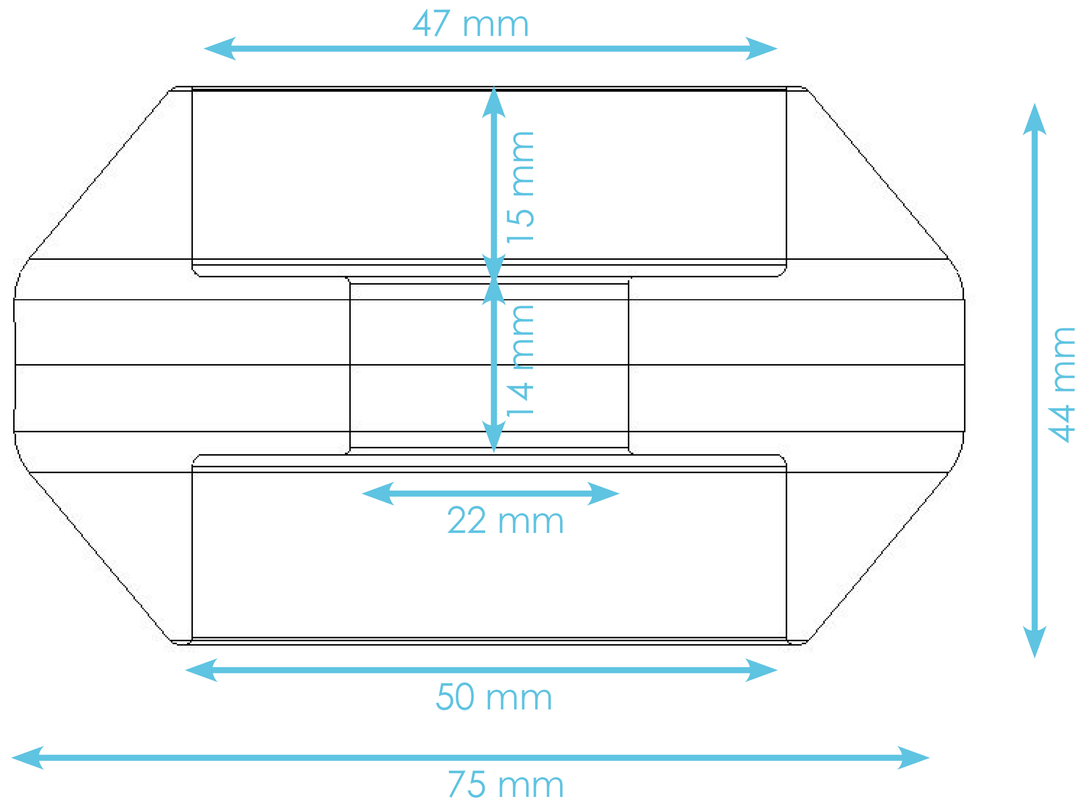
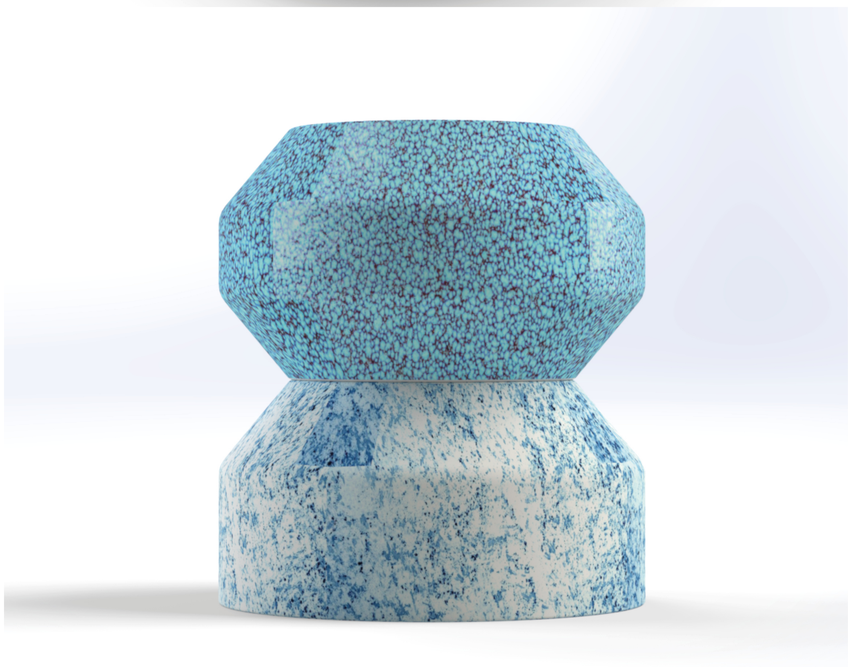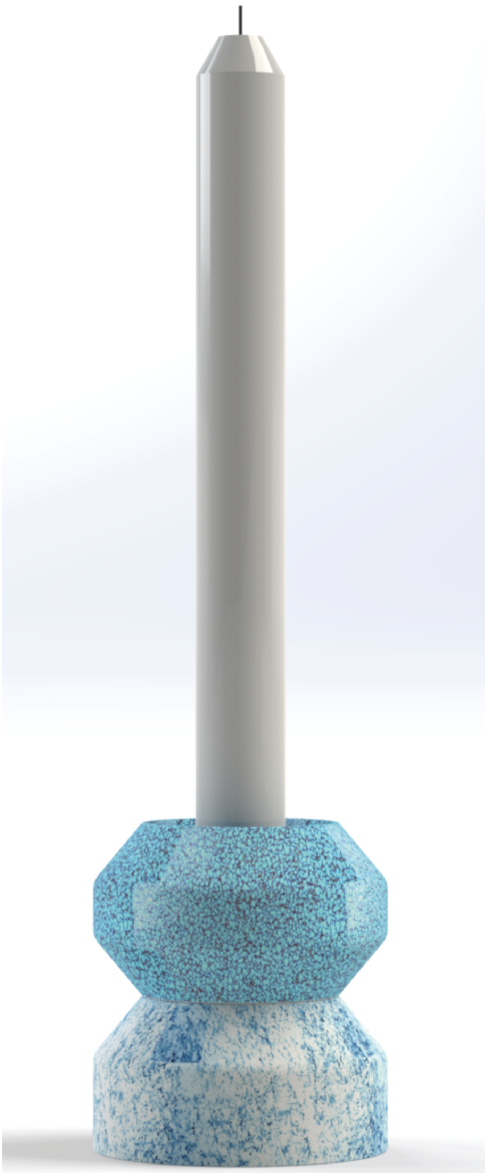
The candle holders would be ceramic pieces made from white clay. The would each be glazed and since the firing proces is chemical and can't be the exact same each time each piece will be unique. In my renders I have tried to apply a glazed look in blue colors. Ofcours these pieces can be made in various colours. Because of the glazing the bottom surface won't be glazed since it is not possible in the firing process, so it ill remain white.
The pieces can both be easily produced by a two part mould.